Parts List			
Qty	Part Number	Material	Mass
1	2026-02-19-10-04-09-885	Steel	606.848 g

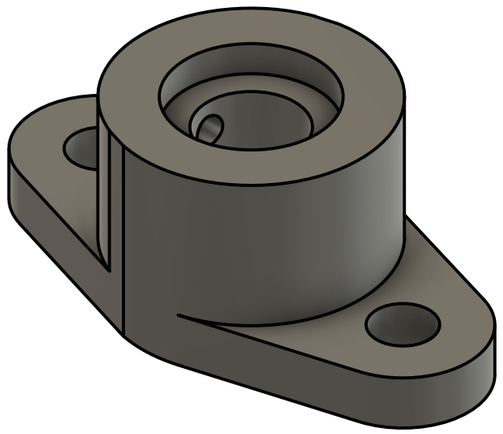

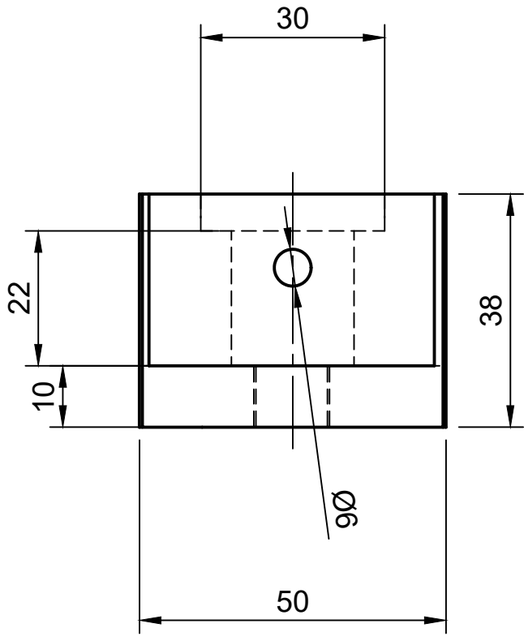

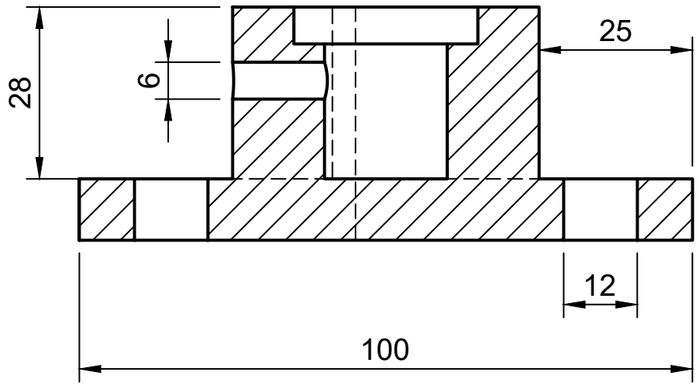

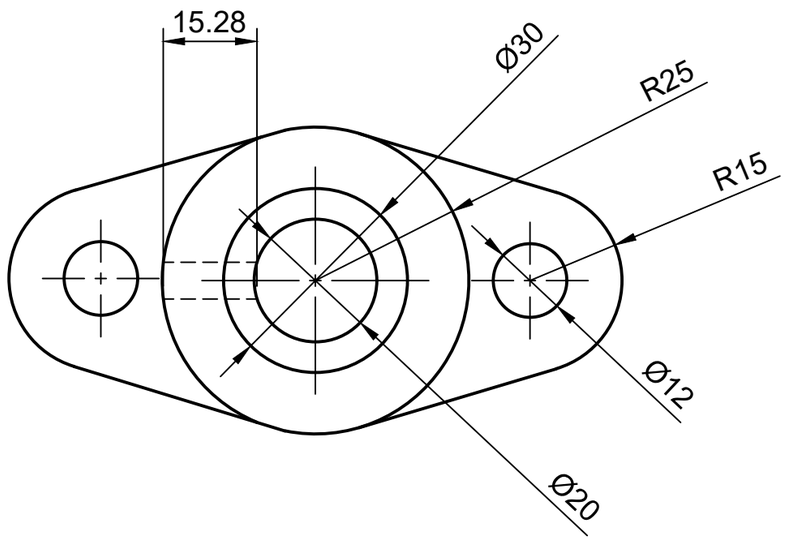
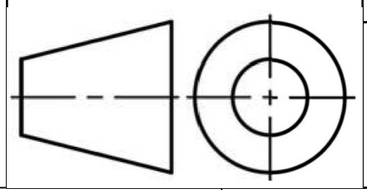
Dept.	Technical reference	Created by	Approved by
CSE	212225040230	MEGALA M S	DR.SARAVANAN M P
		Document type: SKECTH	Document status
		Title: EX:8:CUT SECTION OF SOLIDS	DWG No.
			Rev. E.N / Date of issue 19/2/2026 / Sheet 1/1